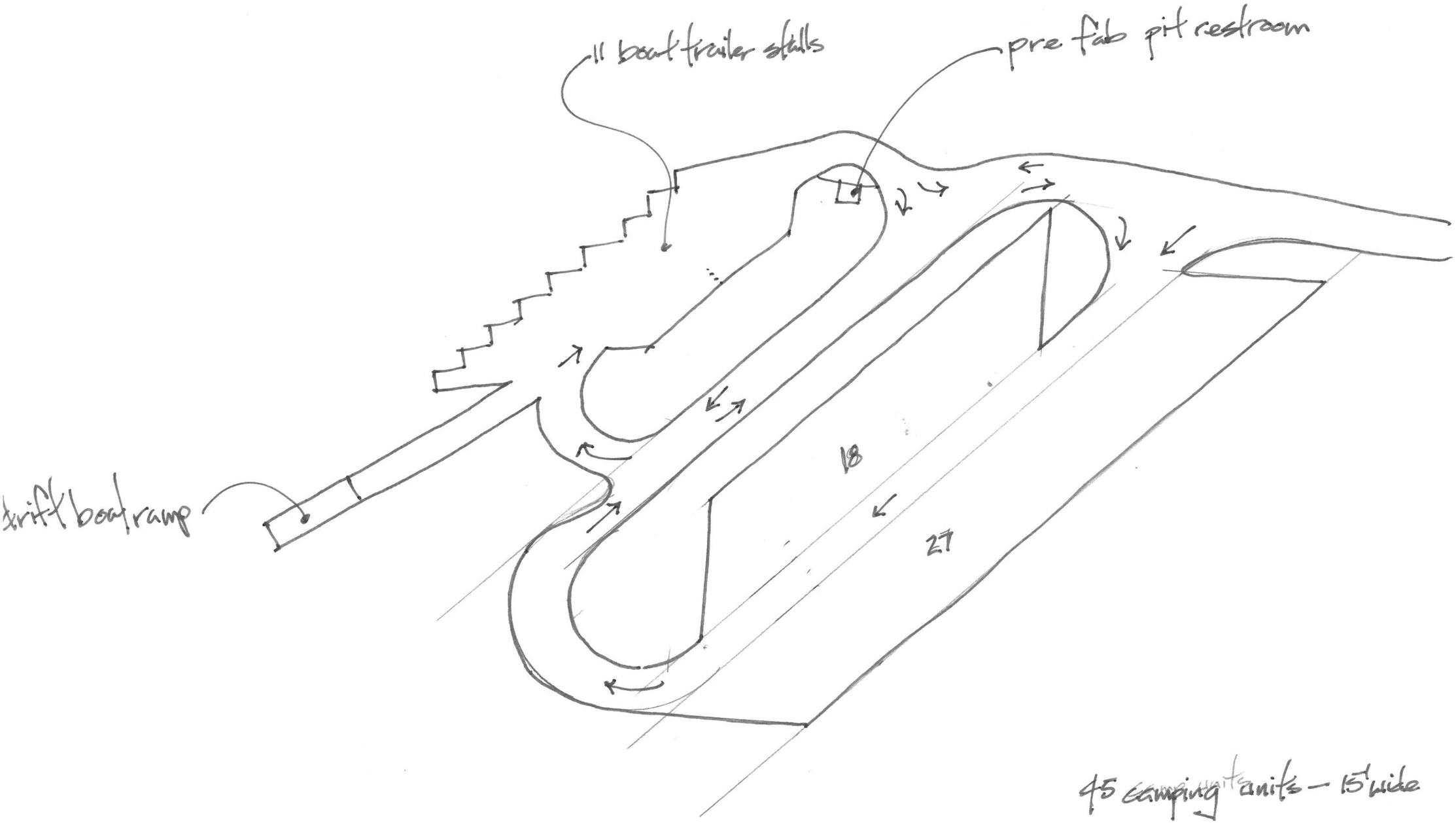

45 camping units – 15' wide