JMC ELLENSBURG CAR WASH
NE 1/4 OF SEC. 11 T17N, R18E, W.M., KITTITAS COUNTY, WA

RECEIVED 11/13/25 COMMUNITY DEVELOPMENT P25-129

EXISTING	PROPOSED	
		PROPERTY LINE
		R.O.W. CENTERLINE
		EASEMENT
		CONCRETE
		A.C. PAVING
		GRAVEL
		LANDSCAPE
	SC	SAWCUT LINE
		FENCE (CHAINLINK)
90.00	90.00	SPOT ELEVATION
W	W	WATER MAIN
	DW	DOMESTIC WATER
S	S	SEWER MAIN
D	D	STORM DRAIN
		FIRE HYDRANT
		WATER METER
		GATE VALVE
		SEWER MANHOLE
		STORM CB
		STORM MANHOLE
E	UP	ELECTRICAL LINE
T	UT	TELEPHONE LINE
G	G	GAS LINE
E	E	POWER VAULT

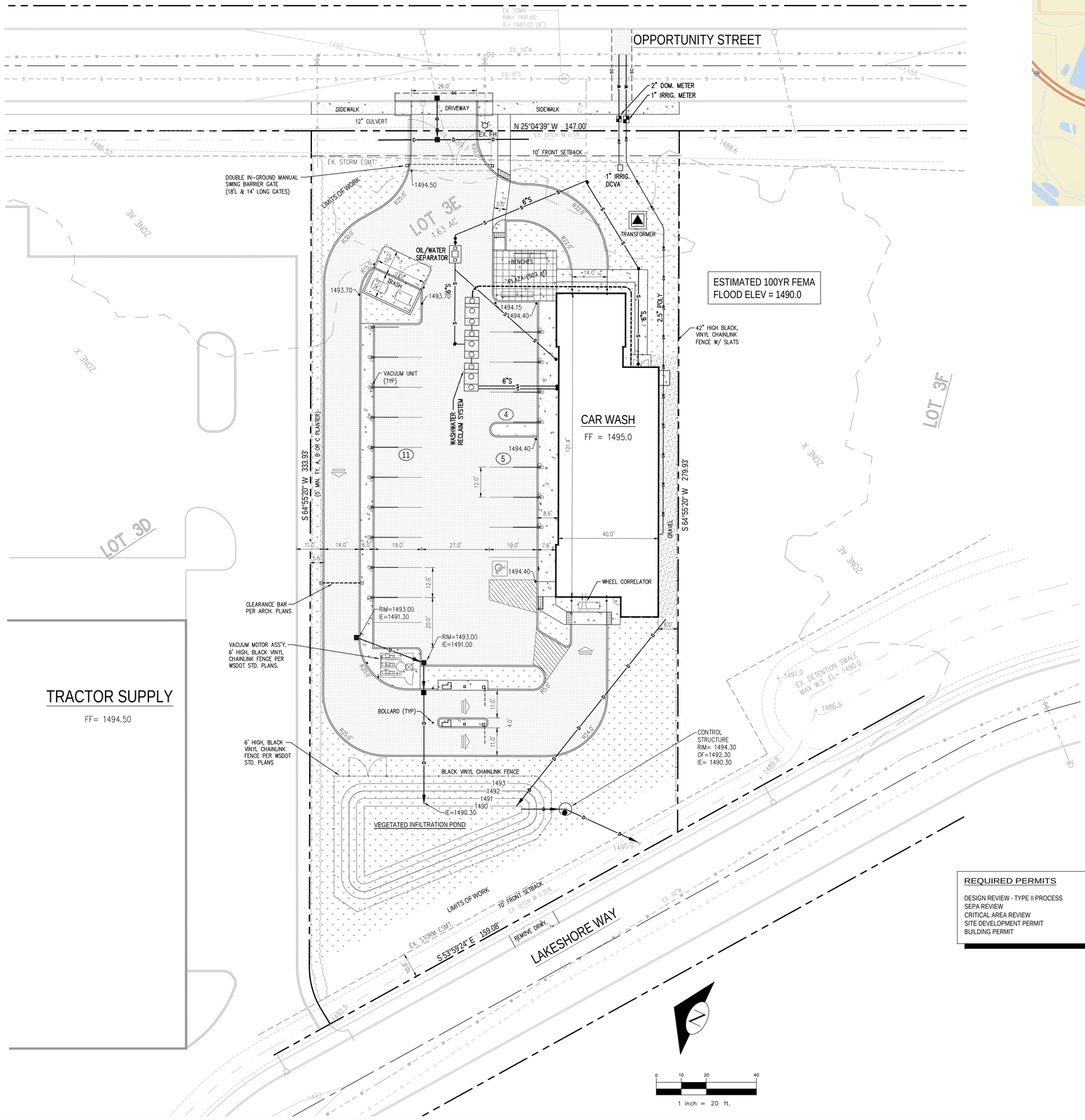

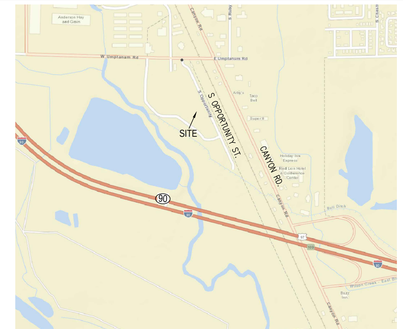

VICINITY MAP
SCALE: N.T.S.

PROJECT TEAM

DEVELOPER
JODY MILLER CONSTRUCTION
CONTACT: JODY MILLER
PHONE: (253) 537-6116
EMAIL: jodyjr@jodymillerconstruction.com

CIVIL ENGINEER
TERRAFORMA DESIGN GROUP, INC.
5027 51ST AVENUE SW
SEATTLE, WA 98136
CONTACT: PEDRO DEGUZMAN, PE
PHONE: (206) 795-9023
EMAIL: pedro@terraformadesigngroup.com

ARCHITECT
HELIX DESIGN GROUP
CONTACT: EUN BACKSTROM
PHONE: (253) 922-9037
EMAIL: eunb@helixdesigngroup.com

GOVERNING AGENCIES

SITE, DRAINAGE, WATER, SEWER, STORM, ELECTRIC, GAS
CITY OF ELLENSBURG
501 N ANDERSON STREET, ELLENSBURG, WA 98296

PLANNING: KAI BJARKE, ASSISTANT PLANNER
bjorkek@ellensburgwa.gov
ENGINEERING: CRAIG JONES, DEVELOPMENT COORDINATOR
jonesc@ci.ellensburg.wa.us
NATURAL GAS: DARIN YUSI, GAS ENGINEER
yusid@ci.ellensburg.wa.us
ELECTRIC: PAUL MEYER, ELECTRICAL ENGINEER
meyerp@ci.ellensburg.wa.us

FIRE PREVENTION
KITTITAS VALLEY FIRE & RESCUE
CONTACT: DAN JOHNSON, FIRE PREVENTION CAPTAIN
prevention@kvfr.org

PROPERTY INFO

PARCEL NO: 956115

ADDRESS: NOT DETERMINED

LEGAL DESCRIPTION
PENDING LOT 3E OF LAKESHIDE II SHORT PLAT

VERTICAL DATUM
NAVD88

PROJECT DATA

SITE AREA:	1.08 ACRES
ZONING:	COMMERCIAL HIGHWAY
BUILDING USE:	CAR WASH
BUILDING AREA:	4650 SF
FIRE SPRINKLER:	NO
BUILDING HEIGHT:	23 FT
REQ'D PARKING: 4650 * 1/300=	15.5 STALLS
PROVIDED PARKING:	20 STALLS
TOTAL DISTURBED AREA:	43,485 SF = 0.998 AC
EX. IMPERVIOUS AREA:	0 SF
PROP. IMPERVIOUS AREA:	25,976 SF
NET CHANGE IMPERVIOUS AREA:	+25,976 SF
TOTAL NEW + REPLACED IMPERVIOUS:	25,976 SF
REQ'D PEDESTRIAN PLAZA = 1% OF DEVELOPMENT AREA + 1% GFA=	481 SF
PROVIDED PEDESTRIAN PLAZA=	507 SF

REQUIRED PERMITS

DESIGN REVIEW - TYPE II PROCESS
SEPA REVIEW
CRITICAL AREA REVIEW
SITE DEVELOPMENT PERMIT
BUILDING PERMIT

10/22/25 PRELIMINARY

PEDRO A. DEGUZMAN
STATE OF WASHINGTON
35646
REGISTERED
PROFESSIONAL ENGINEER
10/20/25

NO	REVISION	DATE
1	PRELIMINARY SITE PLAN	10/20/25

TERRAFORMA DESIGN GROUP, INC.
CIVIL ENGINEERING & LANDSCAPE ARCHITECTURE
5027 51st Avenue SW Seattle WA 98136
phone 206.795.9023 website www.terraformadesigngroup.com

PROJECT NO.
TDG # 25014
DRAWN BY:
PAD
CHECKED BY:
PAD

GLACIER CAR WASH - ELLENSBURG
13XX SOUTH OPPORTUNITY STREET, ELLENSBURG, WA 98926
PARCEL ID. 956115

SHEET TITLE
SITE PLAN

SHEET NO.
C1

File: 25014-CIVIL-Ellensburg.dwg Date: 10/22/2025, 09:04 AM
T:\Terraforma\Projects\2025\25-0000-ELLENSBURG\25014-CIVIL-Ellensburg.dwg modified by PedroDeGuzman at Oct 22, 2025 - 9:04am

JMC ELLENSBURG CAR WASH
NE 1/4 OF SEC. 11 T17N, R18E, W.M., KITTITAS COUNTY, WA

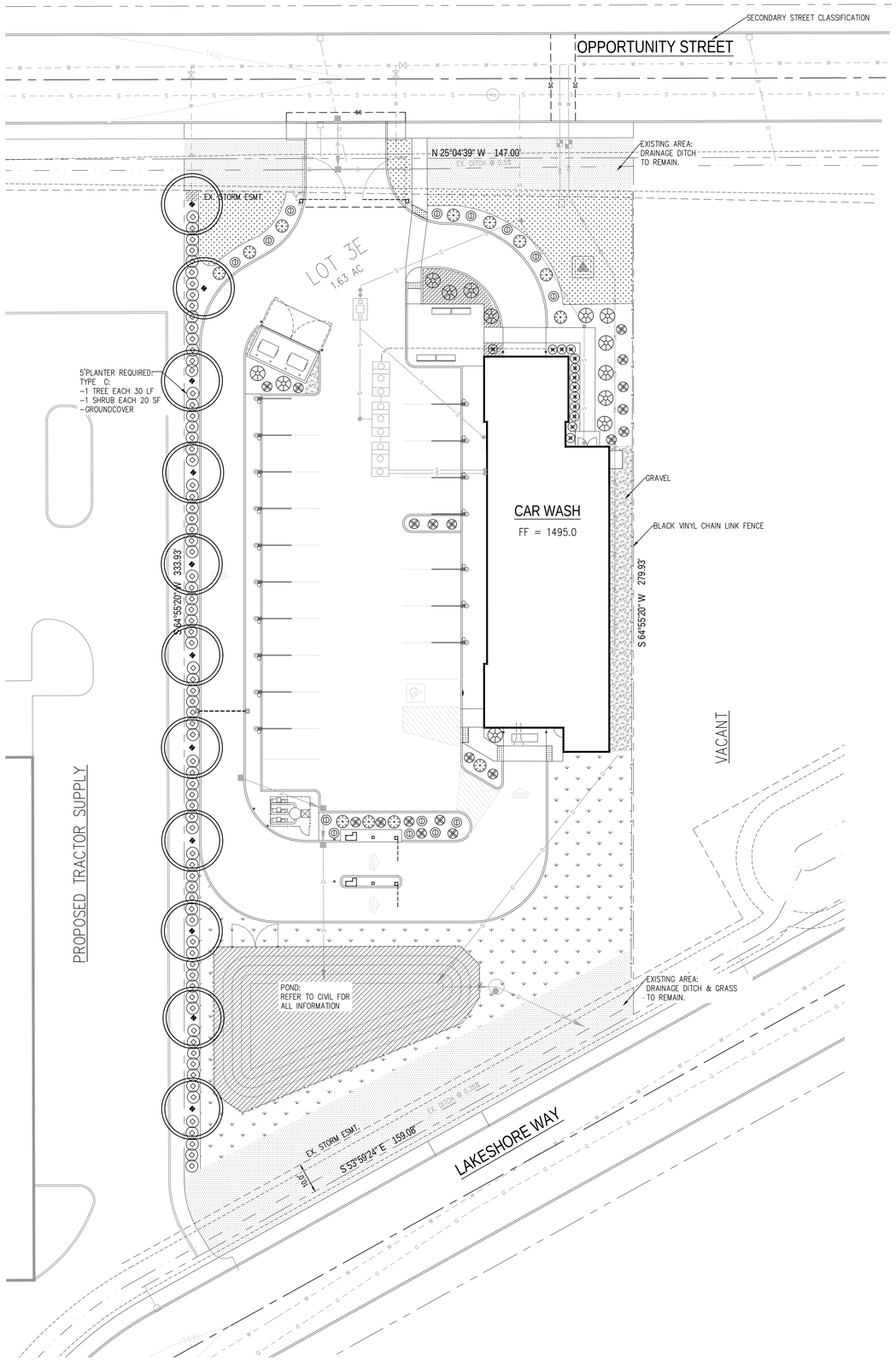

PLANT SCHEDULE

TREES

SYMBOL	SCIENTIFIC NAME / COMMON NAME
◆	KOELREUTERIA PANICULATA GOLDEN RAIN TREE

SHRUBS

SYMBOL	SCIENTIFIC NAME / COMMON NAME
ⓑ	BERBERIS 'CRIMSON PYGMY' CRIMSON PYGMY BARBERRY
◇	LONICERA PILEATA BOX LEAF HONEYSUCKLE
⊕	PINUS MUGHO PUMILIO DWARF PUMILIO MUGHO PINE
⊗	MISCANTHUS 'ADIAGO' ADIOGA DWARF MAIDEN GRASS
⊗	SPIREA 'SHIROBANA' SHIROBANA SPIREA
⊕	WEIGELIA 'VARIEGATA NANA' VARIEGATED DWARF WEIGELIA

GROUNDCOVER

SYMBOL	SCIENTIFIC NAME / COMMON NAME
	MAHONIA REPENS CREEPING MAHONIA
	GRASS SOD SOD GRASS
	GRASS: SOD AND OR HYDROSEED
	STORM POND AREA: REFER TO CIVIL ENGINEER

0 10 20 40
1 inch = 20 ft.

PROJECT TEAM

DEVELOPER
MILLER INVESTMENTS I, LLC
PO BOX 44628
TACOMA, WA 98448
CONTACT: JODY MILLER
PHONE: (253) 537-6116
EMAIL: jodyjr@jodymillerconstruction.com

CIVIL ENGINEER
TERRAFORMA DESIGN GROUP, INC.
5027 51ST AVENUE SW
SEATTLE, WA 98136
CONTACT: AKEMI SAKAIDA, LA
PHONE: (206) 795-7901
EMAIL: akemi@terraformadesigngroup.com

ARCHITECT
HELIX DESIGN GROUP
CONTACT: EUN BACKSTROM
PHONE: (253) 922-9037
EMAIL: eunb@helixdesigngroup.com

GOVERNING AGENCIES

SITE, DRAINAGE, WATER, SEWER, STORM, ELECTRIC, GAS
CITY OF ELLENSBURG
501 N ANDERSON STREET, ELLENSBURG, WA 98296

PLANNING: KAI BJARKE, ASSISTANT PLANNER
bjarkek@ellensburgwa.gov

PROPERTY INFO

PARCEL NO: 956115

ADDRESS: NOT DETERMINED

LEGAL DESCRIPTION
PENDING LOT 3E OF LAKESHIDE II SHORT PLAT

VERTICAL DATUM
NAVD88

PROJECT DATA

SITE AREA:	1.08 ACRES
ZONING:	COMMERCIAL HIGHWAY
BUILDING USE:	CAR WASH

10/24/25

STATE OF WASHINGTON REGISTERED LANDSCAPE ARCHITECT

AKEMI RAE SAKAIDA
CERTIFICATE NO. 794
EXPIRES 06/16/26

NO	REVISION	DATE
---	LAND USE SUBMITTAL	10/24/25

TERRAFORMA DESIGN GROUP, INC.
CIVIL ENGINEERING & LANDSCAPE ARCHITECTURE
5027 51st Avenue SW Seattle WA 98136
phone 206.795.9023 website www.terraformadesigngroup.com

PROJECT NO.
TDG # 25014
DRAWN BY:
PAD
CHECKED BY:
PAD

GLACIER CAR WASH - ELLENSBURG
13XX SOUTH OPPORTUNITY STREET, ELLENSBURG, WA 98926
PARCEL ID. 956115

SHEET TITLE
LANDSCAPE PLAN

SHEET NO.
L1.1

T:\1-Terraforma\1-Projects\25014-CARWASH-ELLENSBURG\25014-LSC-CarWash-Ellensburg.dwg modified by Akemi at Oct 23, 2025 - 3:16pm

SITE PLAN LEGEND

DESCRIPTION	SYMBOL AND TEXT
PROPERTY LINE length (ft) angle (survey)	100.00' N 90° 00' 00" W
PROPERTY SETBACK LINE description and setback distance	10'-0"
EASEMENT description and dimension	10'-0"
WORK POINT building corner, starting building layout reference point	WP
BUILDING outline of building	BUILDING T.O.F. = 100.0'
FENCE height/description	4' CHAINLINK FENCE
row count, compact stall indicator (C), wheel stops where curb **PARKING STALL AND LANDSCAPE PLANTER**	R=2' C C 18'-0"
ACCESSIBLE PARKING STALLS row count, accessible stall indicator (H.C.), concrete curb, curb cut, H.C. parking signs, 2% max slope all directions	2 26'-0"
FIRE HYDRANT (E) = existing	F.H
CENTERLINE OF STREET street name	STREET NAME
EDGE OF ROAD description	EDGE OF PAVEMENT
BOLLARD fixed 6" diameter steel bollard, concrete apron	B
removable 6" diameter steel bollard, concrete apron	B(r)
(E) = existing	
CONCRETE PAVEMENT concrete pavement with troweled joint pattern as shown on site plan	CONCRETE PAVING
ASPHALT PAVEMENT asphalt pavement	ASPHALT PAVING
LANDSCAPE AREA landscape area	LANDSCAPE AREA
GRAVEL AREA gravel area	GRAVEL AREA
CONCRETE CURB TYPES extruded concrete curb	
vertical concrete curb	
LANDSCAPE BUFFER LINE (E) = existing	

GENERAL NOTES

NOTE
1. ABBREVIATIONS: (D) - DEMOLITION (R) - RELOCATE (E) - EXISTING TO REMAIN (S) - SALVAGE
2. REFER TO SHEET A000 FOR STANDARD ABBREVIATIONS LIST.
3. PROVIDE PAVEMENT MARKINGS (PAINTED LINES AND GRAPHICS) AT ALL PARKING STALLS AND ADA ACCESS AISLES AS SHOWN ON SITE PLAN.
4. PAINT CONCRETE CURBS AT FIRE LANES AND NO PARKING AREAS AS SHOWN ON SITE PLAN.
5. CONNECT ROOF DRAINS TO STORM SYSTEM. INSTALL CLEANOUTS AT EACH ROOF DRAIN CONNECTION.

SITE PLAN NOTES

SYMBOL	NOTE
S01	6' TALL BLACK, VINYL CHAINLINK FENCE AROUND VACUUM MOTOR ASSEMBLY.
S02	HEIGHT CLEARANCE SIGN.
S03	DUMPSTER ENCLOSURE CONCRETE PAVING.
S04	CONCRETE SIDEWALK.
S05	4' TALL BLACK, VINYL CHAINLINK FENCE
S06	PAINT STRIPING.
S07	DOUBLE IN-GROUND MANUAL SWING BARRIER GATE
S08	PAY STATION EQUIPMENT BY CARWASH EQUIPMENT SUPPLIER.
S09	SELF SERVICE VACUUM STALLS. (2-9, 12-20)
S10	OUTLINE OF CANOPY ABOVE.
S11	TACTILE WARNING EACH SIDE OF DRIVE AISLE PER 2E / A020
S12	ACCESSIBLE ROUTE TO MAIN OFFICE ENTRANCE TO COMPLY WITH WA51-50-1106, ANSI 406.11 AND 402
S13	TRANSFORMER
S14	PRE-MANUFACTURED METAL BENCHES (4)
S15	4'-6" X 6' CONCRETE PAD.

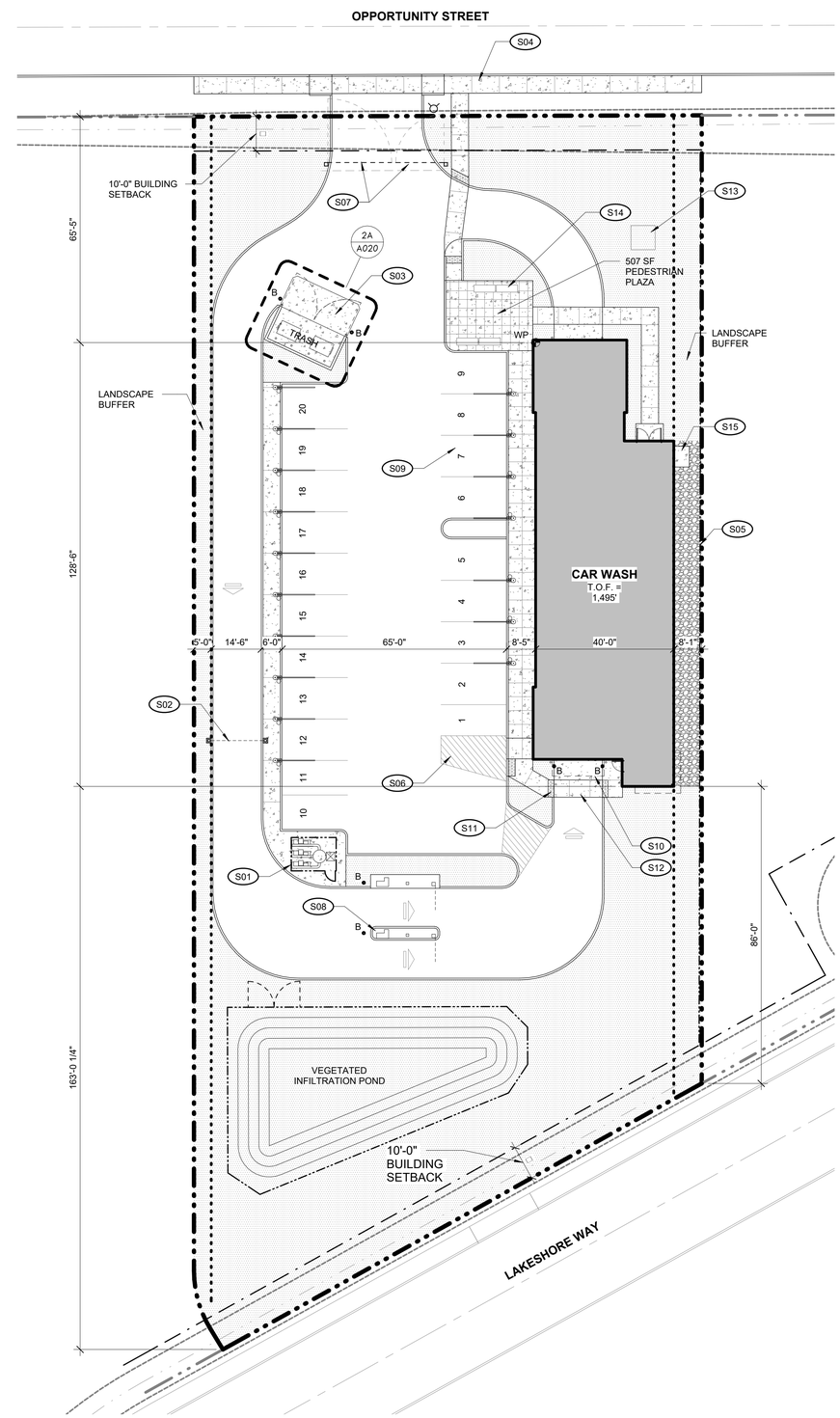

4B SITE PLAN
1" = 20'-0"

NORTH

0' 5' 10' 20' 40'
SCALE: 1" = 20'

Helix design group | SHIVEHATTERY ARCHITECTURE+ENGINEERING
SEAL
800.798.0313 | SHIVE-HATTERY.COM

GLACIER CAR WASH - ELLENSBURG, WA
13XX SOUTH OPPORTUNITY STREET, ELLENSBURG, WA 98926

DRAWN BY	Author
APPROVED BY	Approver
ISSUED FOR	DESIGN REVIEW SUBMITTAL
ISSUE DATE	10.24.25
PROJECT NUMBER	2250009270

ARCHITECTURAL SITE PLAN

A010

Autodesk Docs://2250009270 - JMC Ellensburg Car Wash Site/2250009270-A-R24-Glacier Car Wash- Ellensburg WA.rvt
10/23/2025 9:05:42 PM
Autodesk Revit 2024

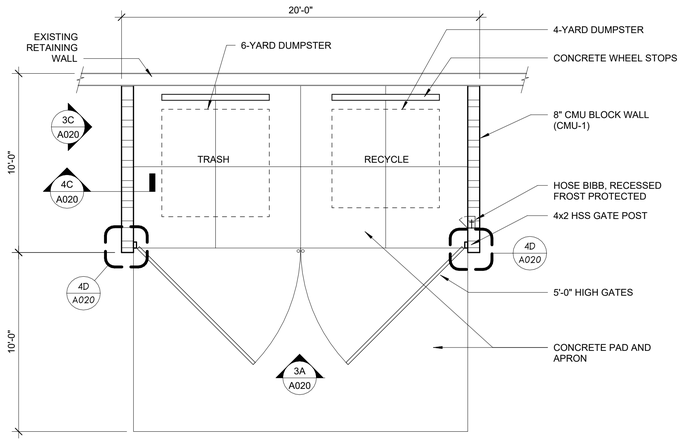

2A TRASH ENCLOSURE PLAN
1/4" = 1'-0"

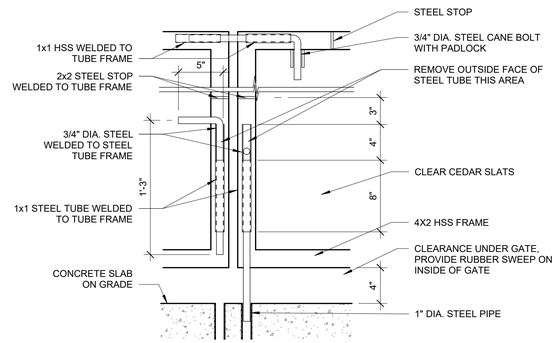

2C DETAIL
1 1/2" = 1'-0"

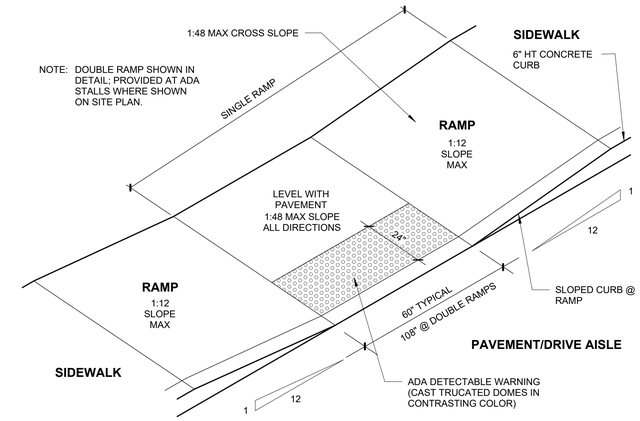

2E DETAIL
3/8" = 1'-0"

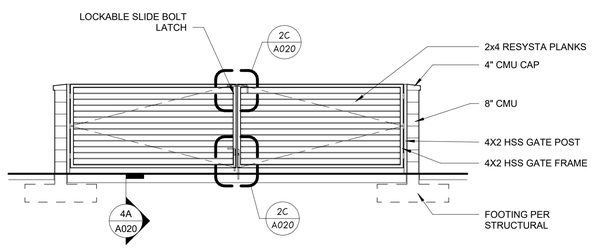

3A FRONT ELEVATION
1/4" = 1'-0"

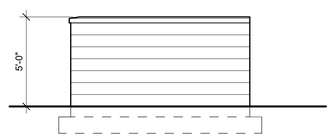

3C SIDE ELEVATION
1/4" = 1'-0"

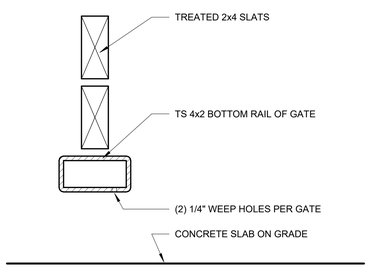

4A DETAIL
3" = 1'-0"

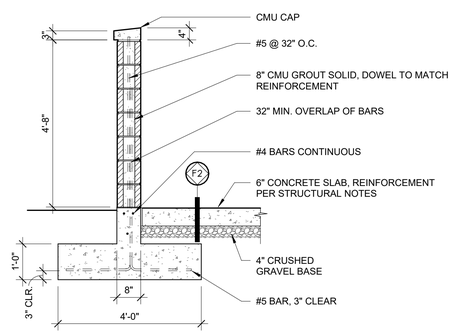

4C SECTION
1/2" = 1'-0"

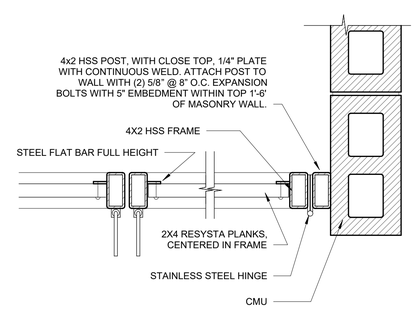

4D DETAIL
1 1/2" = 1'-0"

Helix design group
A DIVISION OF SHIVE-HATTERY
SHIVE-HATTERY
ARCHITECTURE + ENGINEERING
800.798.0313 | SHIVE-HATTERY.COM

SEAL

GLACIER CAR WASH - ELLENSBURG, WA

13XX SOUTH OPPORTUNITY STREET, ELLENSBURG, WA 98926

DRAWN BY	Author
APPROVED BY	Approver
ISSUED FOR	DESIGN REVIEW SUBMITTAL
ISSUE DATE	10.24.25
PROJECT NUMBER	2250009270

SITE DETAILS

A020

Autodesk Docs://2250009270 JMC Ellensburg Car Wash Site/2250009270-A-R24-Glacier Car Wash - Ellensburg WA.rvt
10/22/2025 9:05:43 PM
Autodesk Revit 2024

LEGEND

DESCRIPTION	SYMBOL AND TEXT
ROOM IDENTIFICATION room name room number	ROOM NAME 100
SWINGING DOOR door number, minimum door strike side clearance distances	1'-6" MIN, 10", 1'-0", 6"
STOREFRONT SYSTEM storefront system type SFS-1	SFS1
WORK POINT building corner, starting building layout reference point	WP
OCCUPANT LOAD room occupant count	000
EXIT LOAD exit occupant count	00
FLOOR DRAIN sloped floor level floor	F.D. F.D.
STRUCTURAL COLUMN centered on grid line, centered in wall	
FIRE EXTINGUISHERS fire extinguisher in semi-recess cabinet, fire rated cabinet at fire rated walls	F.E.
wall-mounted fire extinguisher	F.E.
fire extinguisher in surface-mounted cabinet	F.E.
HOSE BIB refer to plan for locations	H.B.
JANITORS SINK square corner janitor floor sink	
DOWNSPOUT refer to plan for size and locations	D.S.
OVERFLOW ROOF LEADER install cow tongue (shaped) solid brass spout at face of wall, refer to plan for locations	O.R.L.

WALL TYPES

DESCRIPTION	SYMBOL AND TEXT
8" CMU WALL	
3 5/8" METAL STUDS @ 16" O.C.	
6" METAL STUDS @ 16 O.C.	
CAST-IN-PLACE CONCRETE	

GENERAL NOTES

NOTE

1. ABBREVIATIONS:

   (D) - DEMOLITION
   (R) - RELOCATE
   (E) - EXISTING TO REMAIN
   (S) - SALVAGE

2. REFER TO SHEET A000 FOR STANDARD ABBREVIATIONS LIST.
3. INSTALL SOUND BATT INSULATION AT ALL INTERIOR (STUD) WALLS.
4. PROVIDE WALL MOUNTED METAL HANDRAILS AT ALL STAIRS. BOTH SIDES OF STAIRS.
5. PROVIDE WALL MOUNTED STAINLESS STEEL HANDRAILS AT ALL STAIRS. BOTH SIDES OF STAIRS.
6. INSTALL SAFETY STAIR TREAD NOSINGS AT ALL STAIRS.
7. PROVIDE TUBE STEEL COLUMN SUPPORT AT ALL PARTIAL HEIGHT WALLS.

PLAN NOTES

SYMBOL	NOTE
F01	OPERABLE WINDOW.

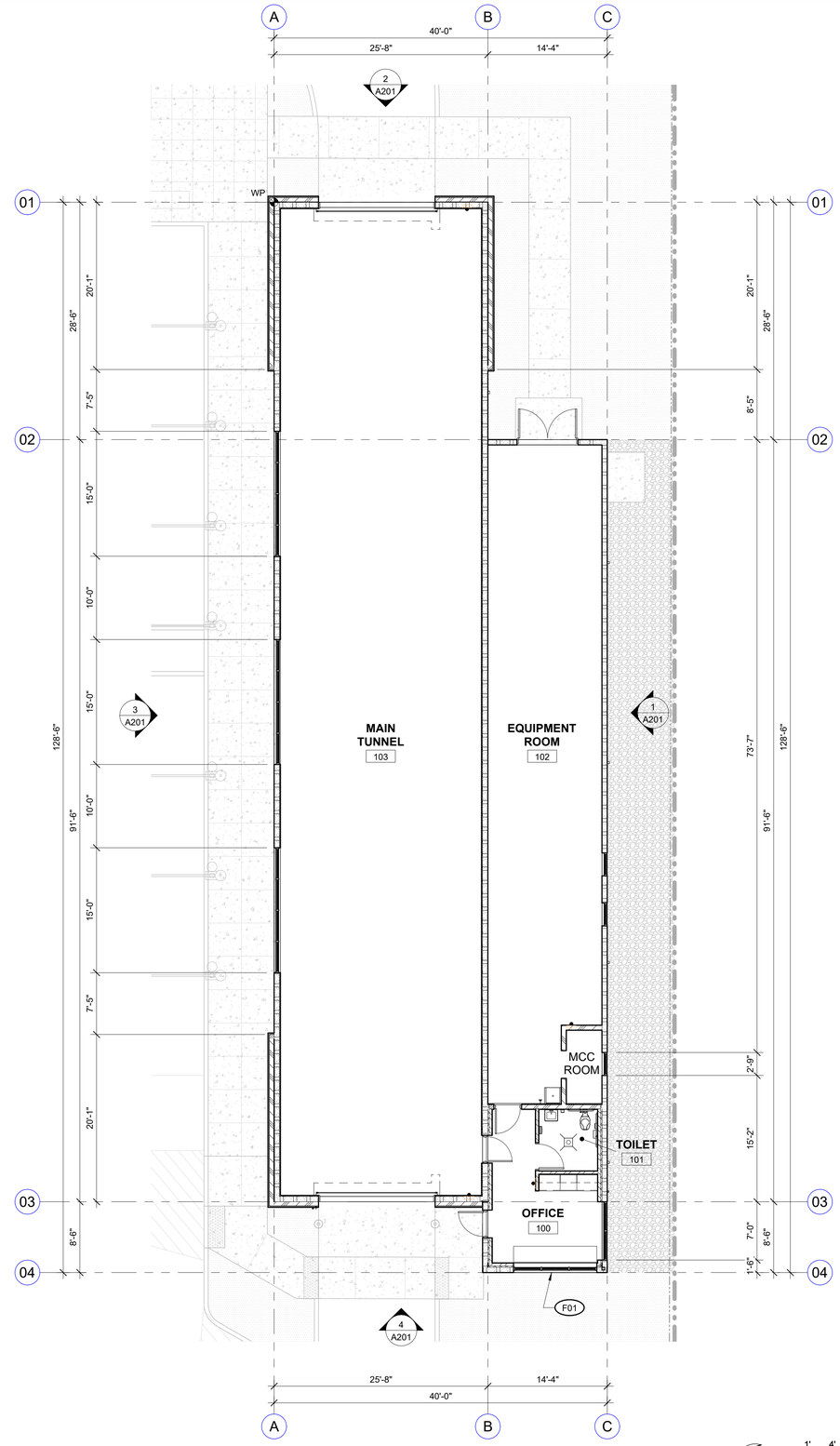

4D FLOOR PLAN
1/8" = 1'-0"

NORTH

SCALE: 1/8" = 1'-0"

Helix design group | SHIVEHATTERY ARCHITECTURE + ENGINEERING
800.798.0313 | SHIVE-HATTERY.COM

SEAL

GLACIER CAR WASH - ELLENSBURG, WA

13XX SOUTH OPPORTUNITY STREET, ELLENSBURG, WA 98926

DRAWN BY	DRW
APPROVED BY	APR
ISSUED FOR	DESIGN REVIEW SUBMITTAL
ISSUE DATE	10.24.25
PROJECT NUMBER	2250009270

FLOOR PLAN

A101

Autodesk Docs://2250009270 JMC Ellensburg Car Wash Site/2250009270-A-F24-Glacier Car Wash- Ellensburg WA.rvt
10/22/2025 9:51:05 PM

Autodesk Revit 2024

1
BOX-RIB VERTICAL METAL PANEL
COLOR: COOL MATTE BLACK
MANF.: AEP SPAN OR SIM.

2
STANDARD CMU BLOCK
COLOR: 7006 EXTRA WHITE LOXON XP
E SATIN LX21W0051
MANF.: BASTILLE OR SIM.

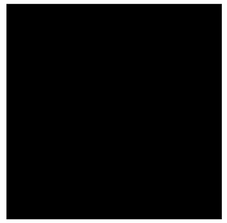

3
METAL FLASHING
STOREFRONT/ DOORS/ WINDOWS
OVERHEAD GARAGE DOORS
CANOPY

COLOR: SW 6258 TRICORN BLACK
PRO INDUSTRIAL DTM I
SEMI-GLOSS B55T01104

4
LED LIGHTING
COLOR: BLUE (RGB 4, 196, 217)

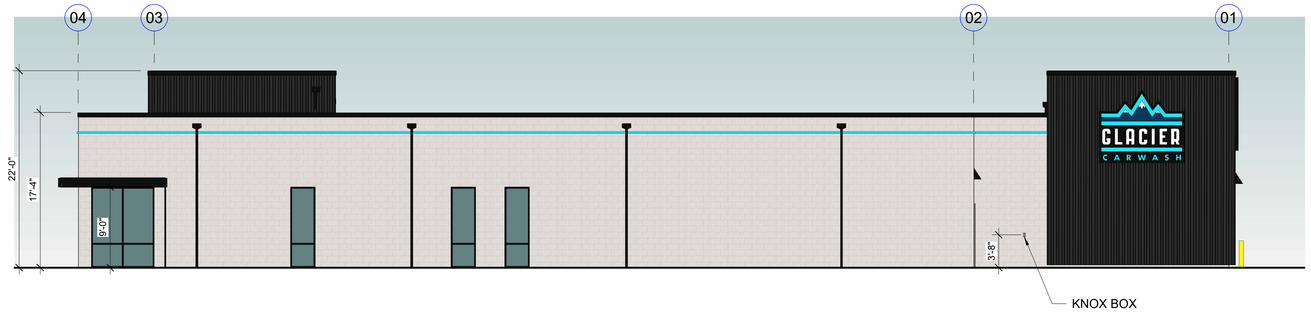

1 SOUTH ELEVATION - FACING ADJACENT LOT
1/8" = 1'-0" 0 12'

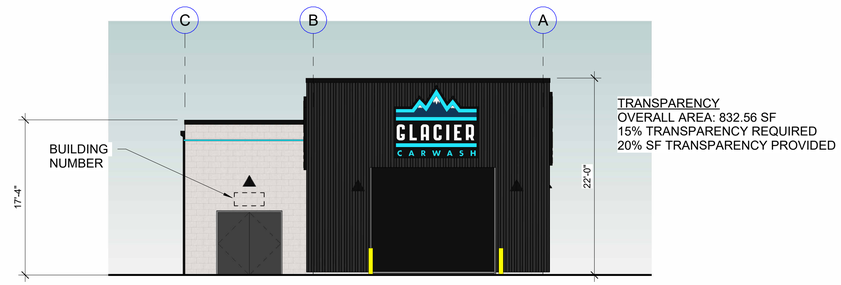

2 EAST ELEVATION - FACING OPPORTUNITY STREET
1/8" = 1'-0" 0 12'

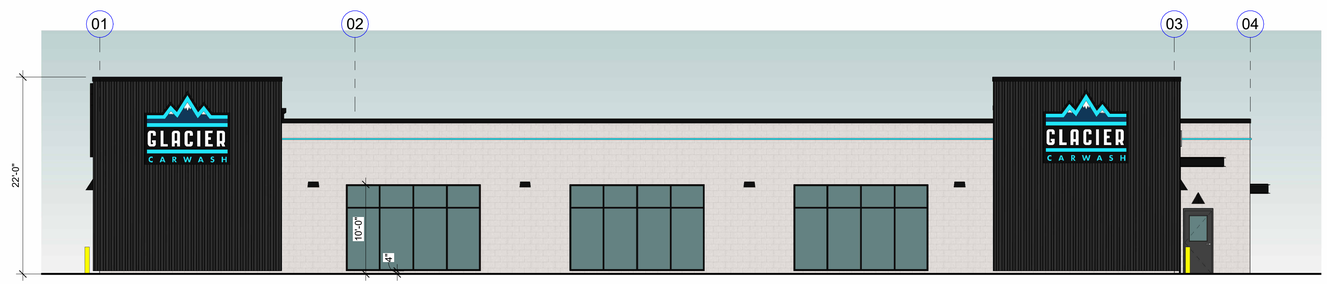

3 NORTH ELEVATION - FACING TRACTOR SUPPLY
1/8" = 1'-0" 0 12'

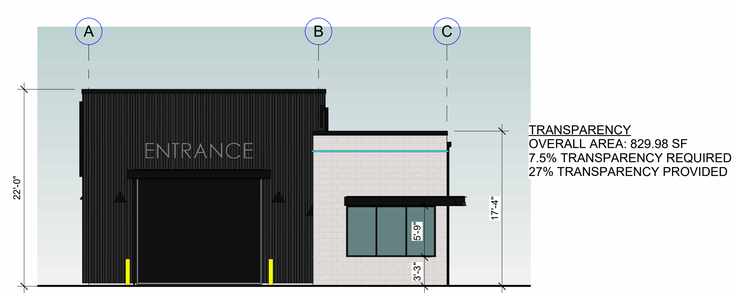

4 WEST ELEVATION - FACING LAKESHORE WAY
1/8" = 1'-0" 0 12'

Helix design group
A DIVISION OF SHIVE-HATTERY
SHIVEHATTERY
ARCHITECTURE + ENGINEERING
800.798.0313 | SHIVE-HATTERY.COM

SEAL

GLACIER CAR WASH - ELLENSBURG, WA

13XX SOUTH OPPORTUNITY STREET, ELLENSBURG, WA 98926

DRAWN BY	Author
APPROVED BY	Approver
ISSUED FOR	DESIGN REVIEW SUBMITTAL
ISSUE DATE	10.24.25
PROJECT NUMBER	2250009270

EXTERIOR ELEVATIONS

A201

Autodesk Docs://2250009270 JMC Ellensburg Car Wash Site/2250009270-A-R24-Glacier Car Wash- Ellensburg WA.rvt
10/23/2025 9:05:58 PM
Autodesk Revit 2024

DRAWN BY: COLBY FLETCHER

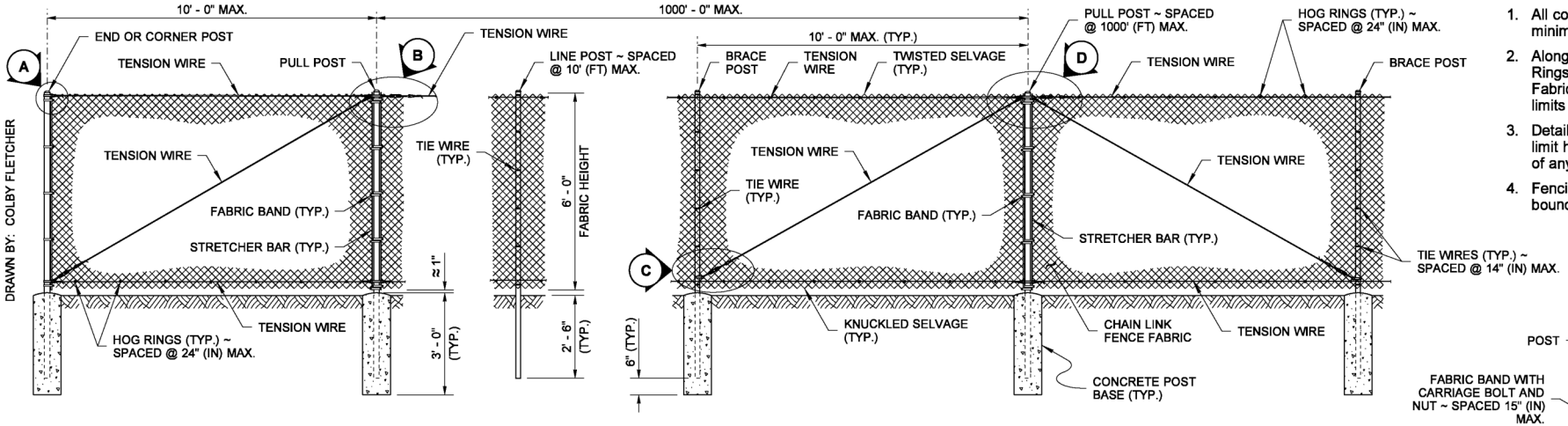

TYPE 3

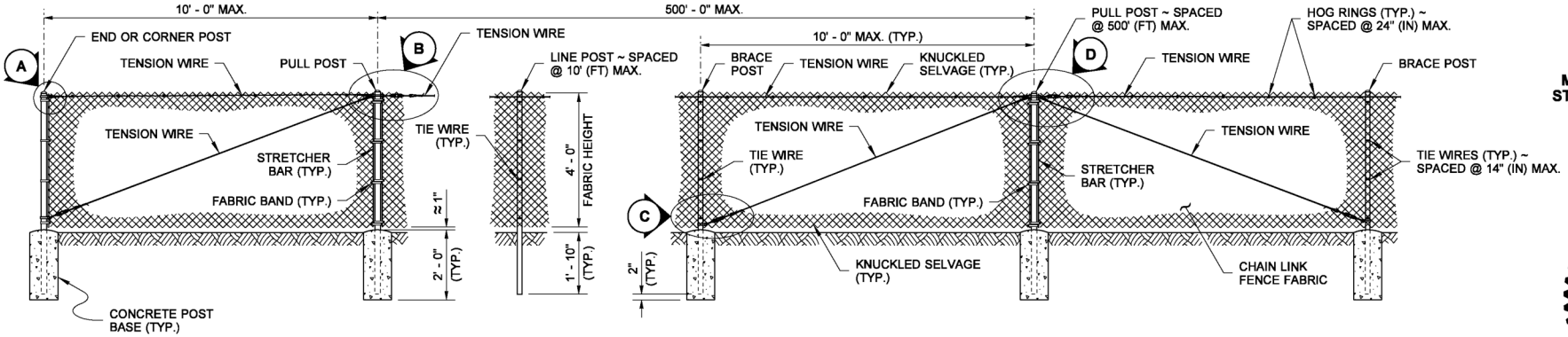

TYPE 4

NOTES

1. All concrete post bases shall be 10" (in) minimum diameter.
2. Along the top and bottom, using Hog Rings, fasten the Chain Link Fence Fabric to the Tension Wire within the limits of the first full fabric weave.
3. Details are illustrative and shall not limit hardware design or post selection of any particular fence type.
4. Fencing shall be used for security and boundary delineation only.

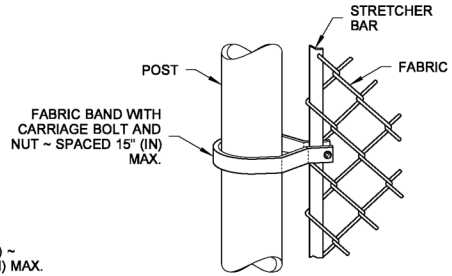

METHOD OF FASTENING STRETCHER BAR TO POST

POST AND RAIL SPECIFICATIONS			
POST	PIPE	ROLL FORMED	
	NOM. SIZE (SCH. 40) I.D.	SECTION	WEIGHT (lb/ft)
END, CORNER, OR PULL POST	2 1/2" DIAM.	Y	5.10
LINE OR BRACE POST	2" DIAM.	Z	1.85

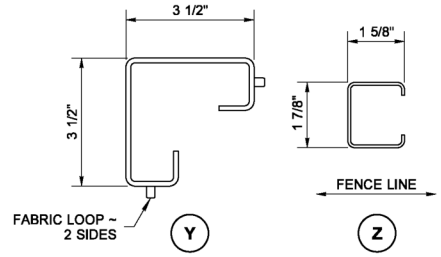

Barry, Ed
Jul 14 2015 11:14 AM

CHAIN LINK FENCE TYPES 3 AND 4

STANDARD PLAN L-20.10-03

SHEET 1 OF 2 SHEETS

APPROVED FOR PUBLICATION
Carpenter, Jeff
Jul 14 2015 11:24 AM
STATE DESIGN ENGINEER
Washington State Department of Transportation

DRAWN BY: COLBY FLETCHER

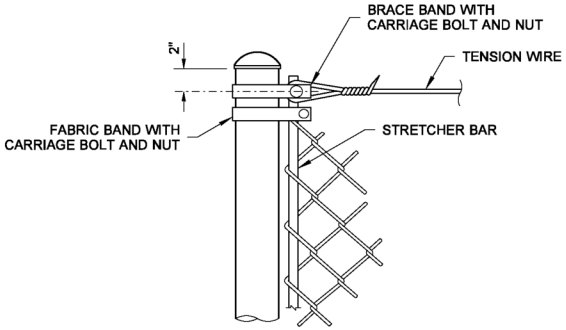

END OR CORNER POST

DETAIL A

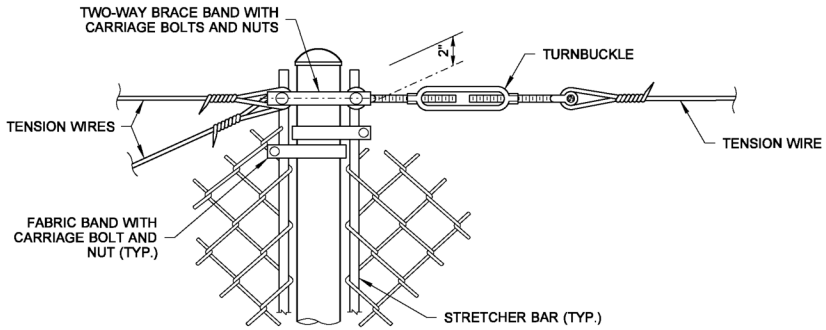

PULL POST (AT END OR CORNER)

DETAIL B

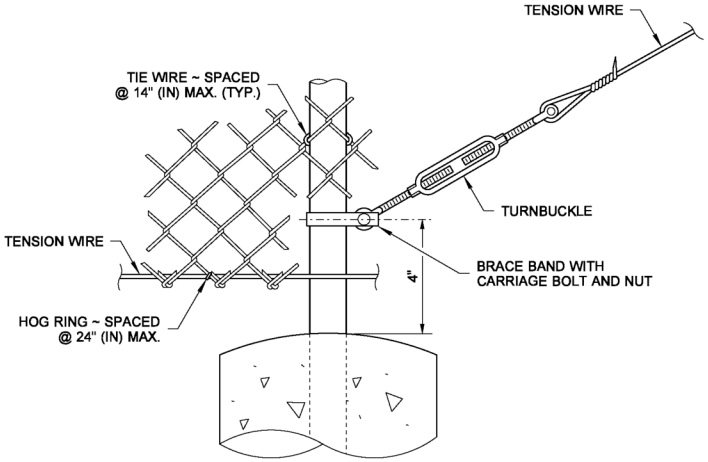

BRACE POST

DETAIL C

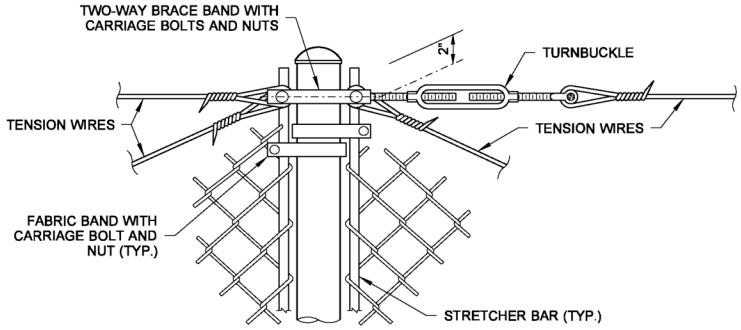

PULL POST (WITHIN RUN)

DETAIL D

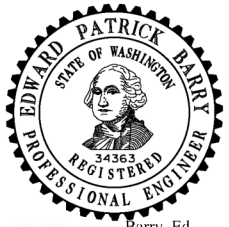

Barry, Ed
Jul 14 2015 11:14 AM

CHAIN LINK FENCE TYPES 3 AND 4

STANDARD PLAN L-20.10-03

SHEET 2 OF 2 SHEETS

APPROVED FOR PUBLICATION
Carpenter, Jeff
Jul 14 2015 11:25 AM
STATE DESIGN ENGINEER
Washington State Department of Transportation

NOTES

1. Materials shall meet the requirements of **Standard Specification 9-16**.

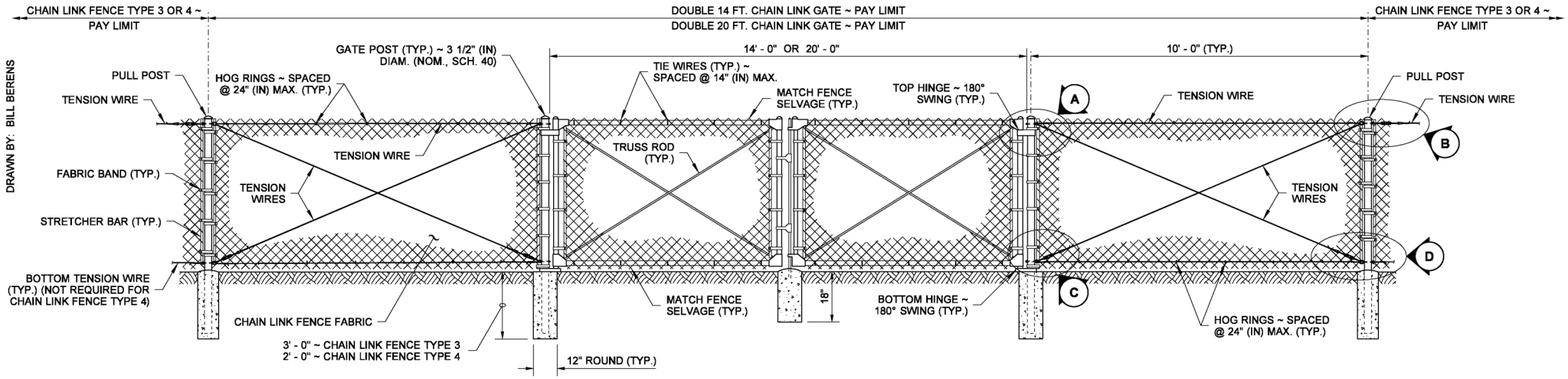

DOUBLE GATE

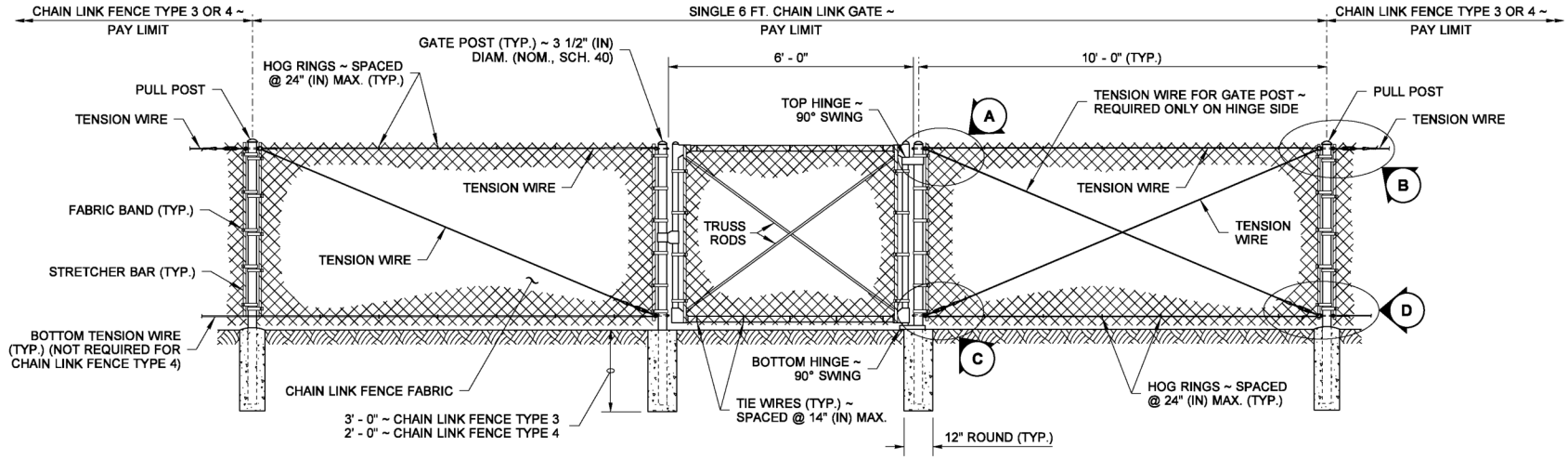

SINGLE GATE

Barry, Ed
May 6 2014 3:57 PM

CHAIN LINK GATE

STANDARD PLAN L-30.10-02

SHEET 1 OF 2 SHEETS

APPROVED FOR PUBLICATION
Bakotich, Pasco
Jun 11 2014 1:40 PM

STATE DESIGN ENGINEER

Washington State Department of Transportation

DRAWN BY: BILL BERENS

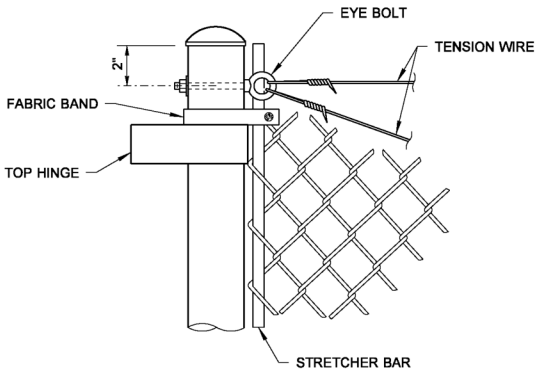

GATE POST

DETAIL (A)

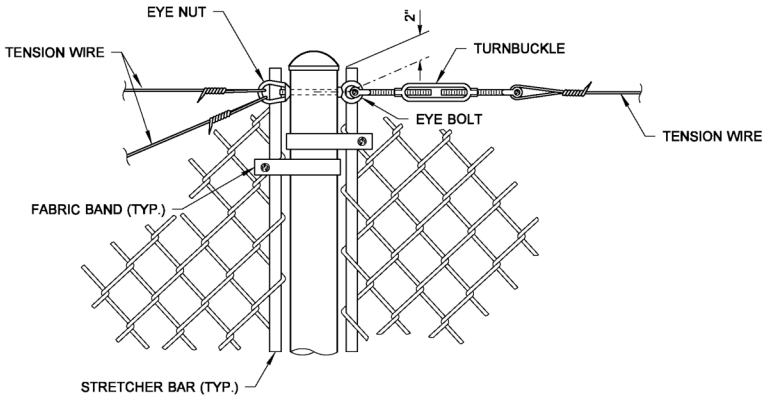

PULL POST

DETAIL (B)

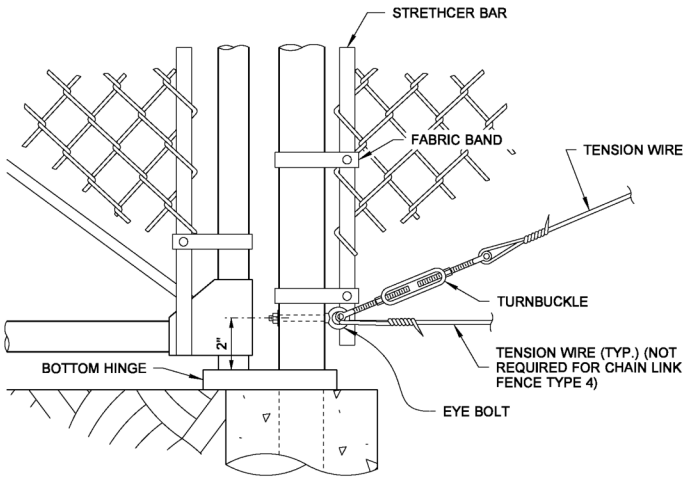

GATE POST

DETAIL (C)

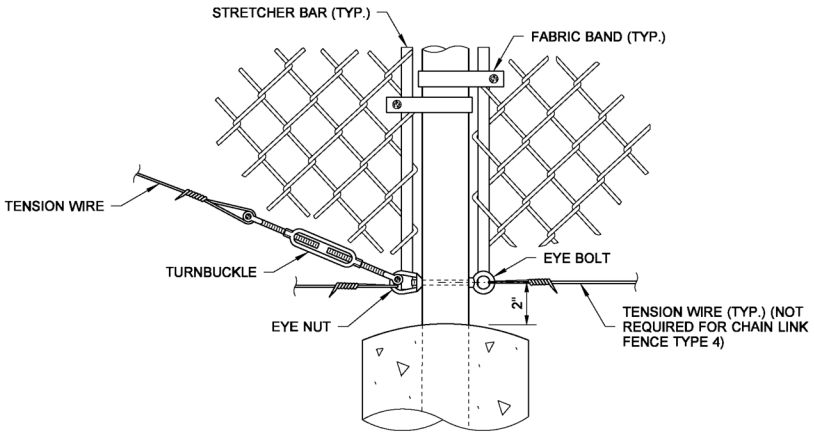

PULL POST

DETAIL (D)

Barry, Ed
May 6 2014 3:58 PM

CHAIN LINK GATE

STANDARD PLAN L-30.10-02

SHEET 2 OF 2 SHEETS

APPROVED FOR PUBLICATION
Bakotich, Pasco
Jun 11 2014 1:41 PM

STATE DESIGN ENGINEER

Washington State Department of Transportation